## INTAKE AIR REFRIGERATION PLUMBING
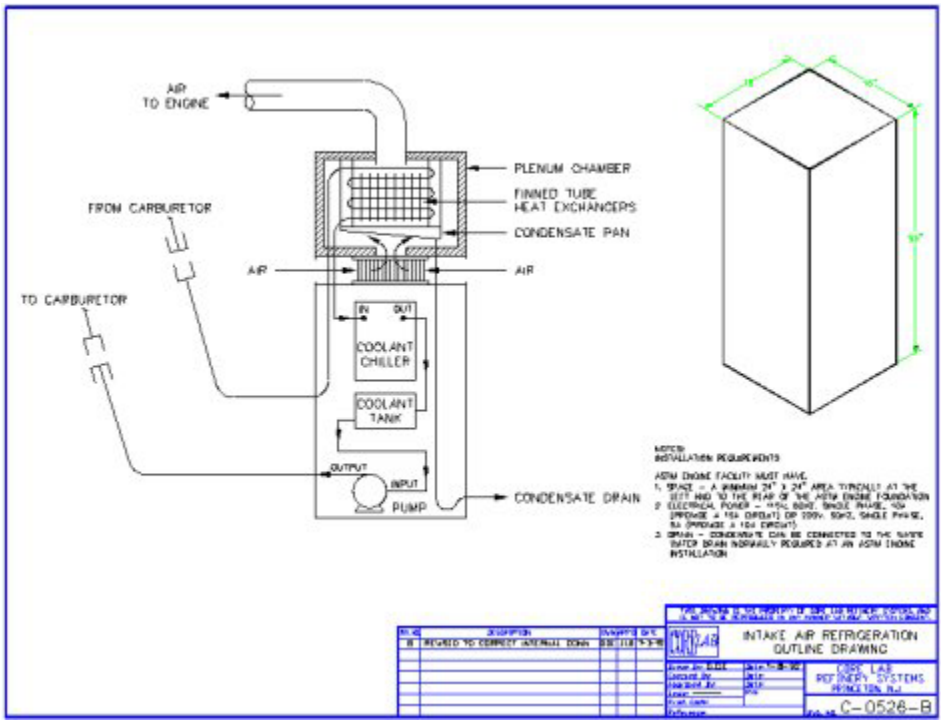
If the temperature of the coolant being supplied by the IAR is cycling than you may have the IAR plumbed incorrectly. Please see the diagram below for the approriate plumbing arrangement. If your system is plumbed incorrectly you can get erratic results from your CFR engine. This is caused by the cycling of the refrigeration compressor.